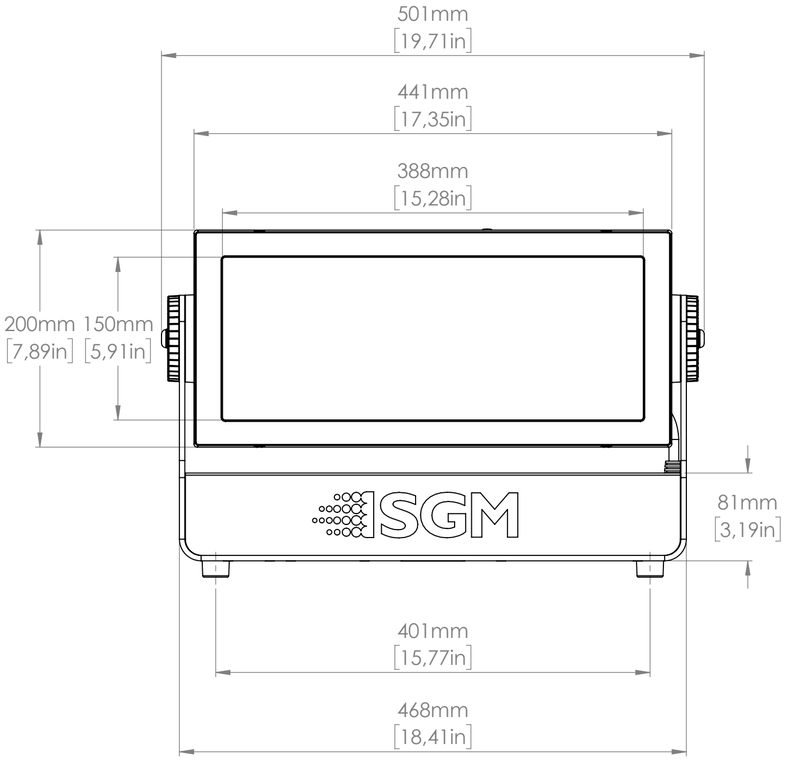
501mm
[19,71in]
441mm
[17,35in]
388mm
[15,28in]
200mm
[7,89in]
150mm
[5,91in]
81mm
[3,19in]
401mm
[15,77in]
468mm
[18,41in]

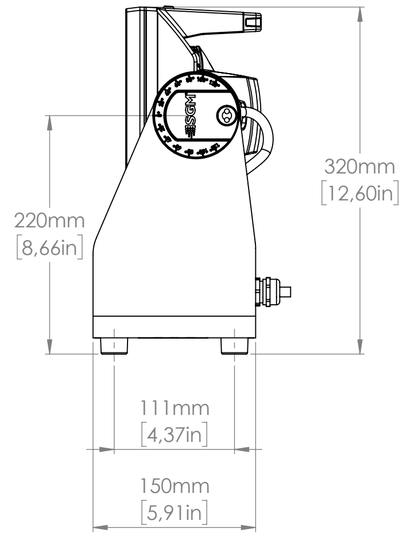
220mm
[8,66in]
320mm
[12,60in]
111mm
[4,37in]
150mm
[5,91in]

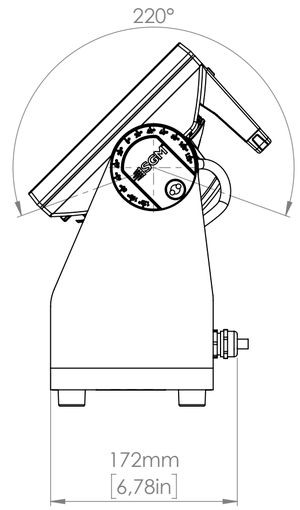
220°
172mm
[6,78in]

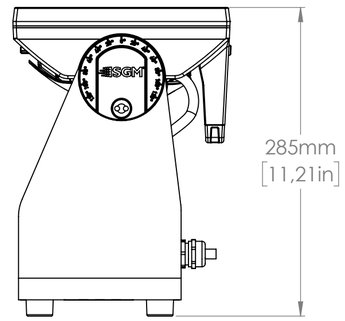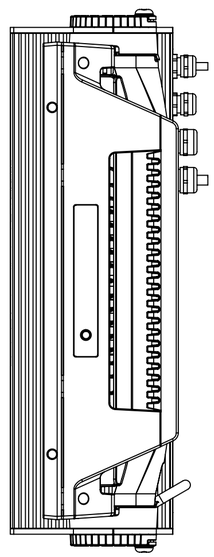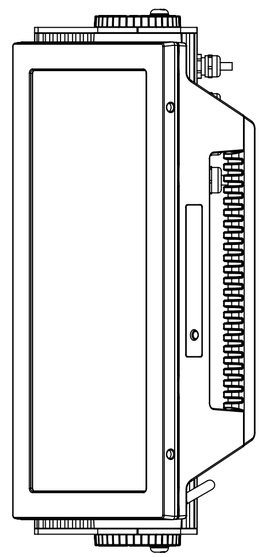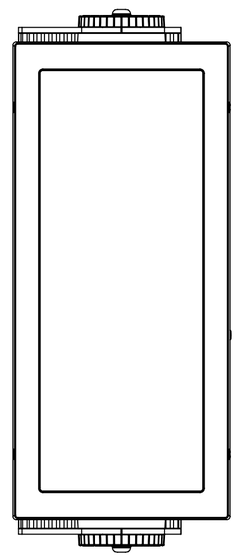
285mm
[11,21in]